JOIN THE DOTS & COLOR

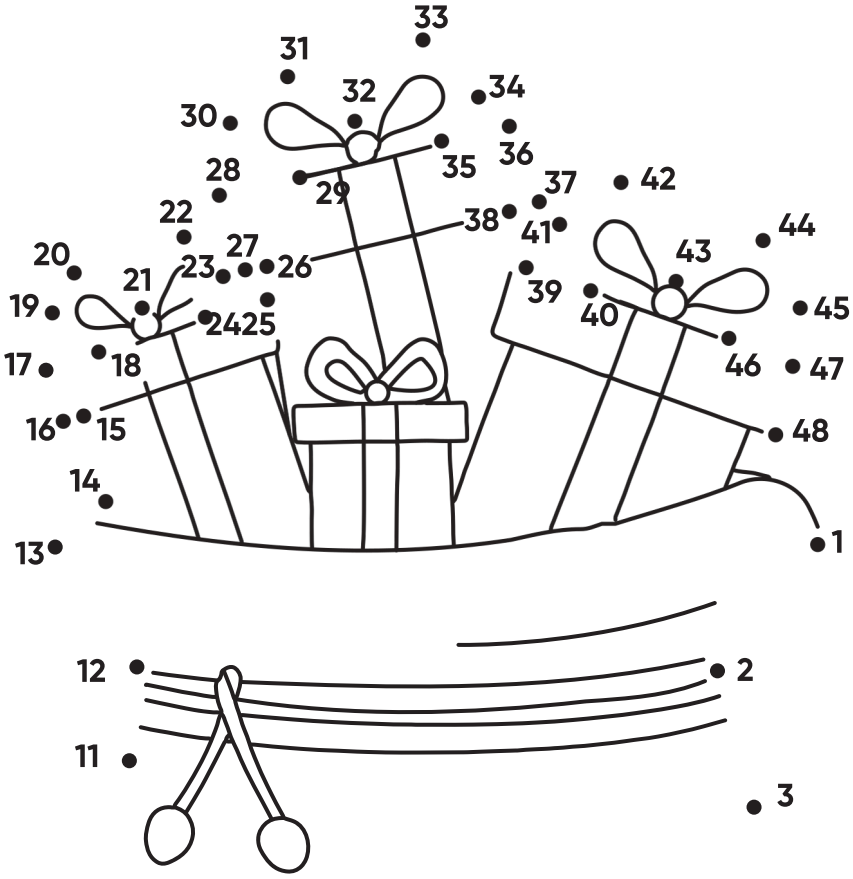

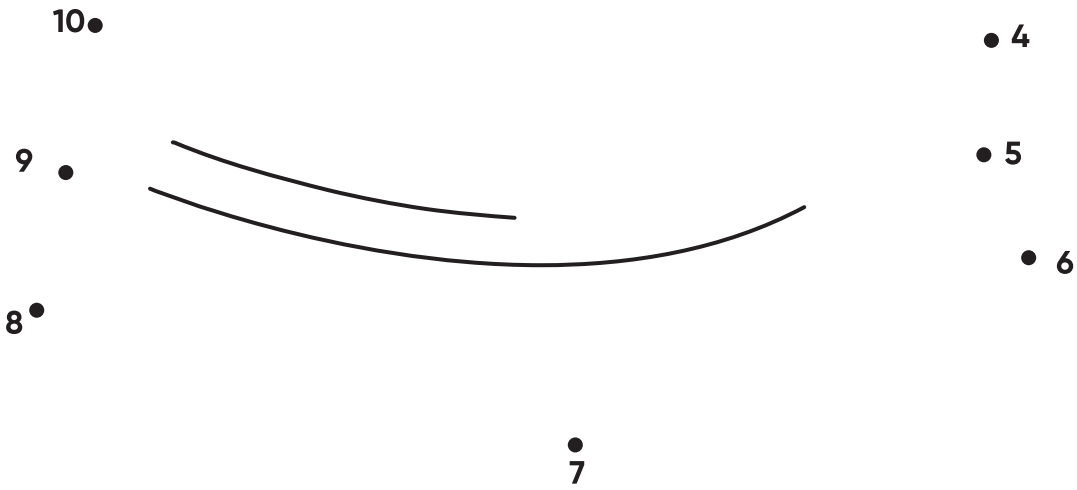

KidSpark
LEARNING IS FUN